77cm Integrated Rangehood

DGE5860HM

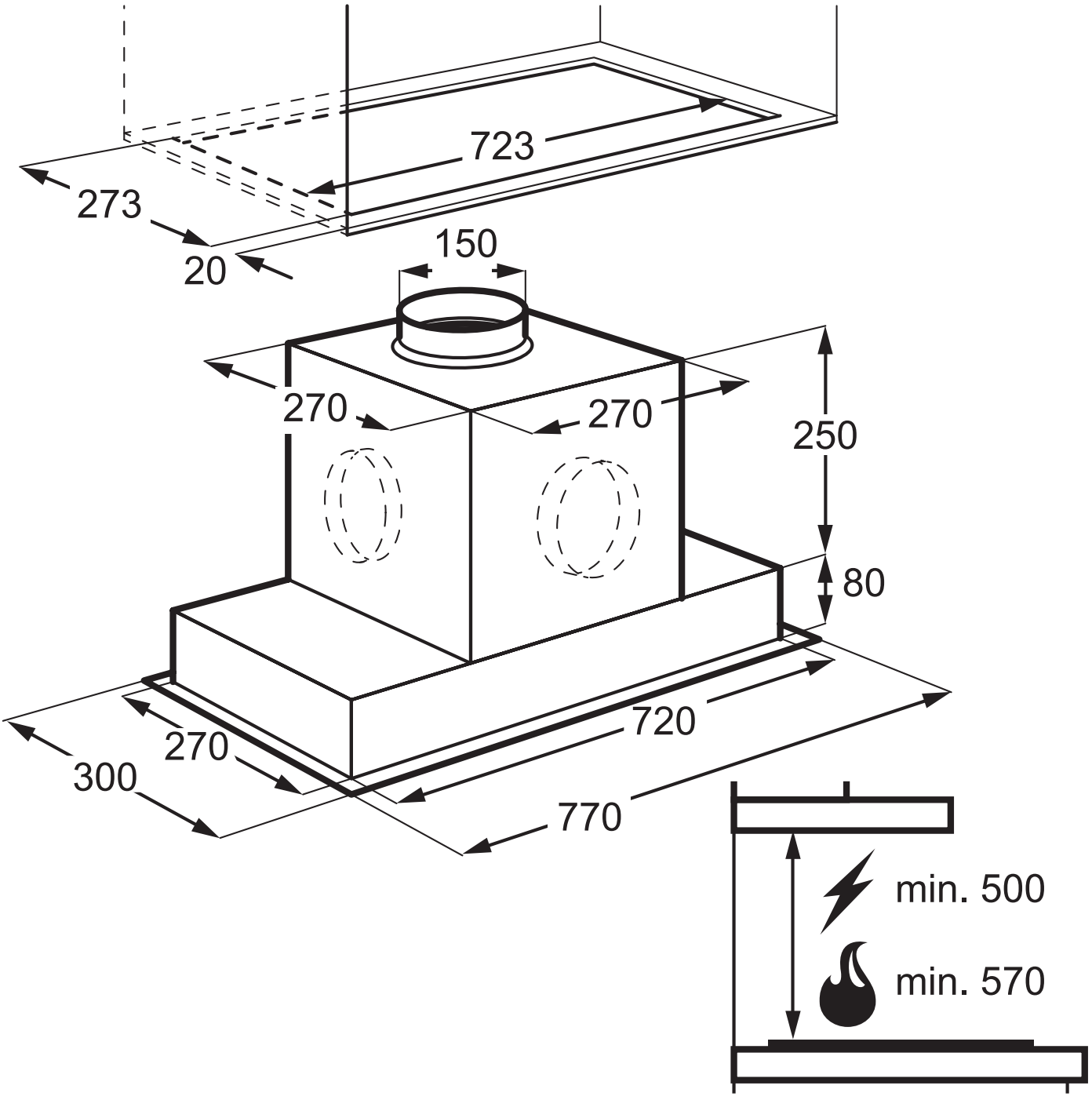

IMPORTANT

These dimensions are a guide only. All measurements are in millimetres (mm).
For complete installation instructions, refer to the manual provided with product.

© 2018 Electrolux Home Products Pty Ltd. ABN 51 004 762 341. ADIM_DGE5860HM_Sep18

5 YEAR WARRANTY
AEG GARANTIE